POTHIER ENTERPRISES LTD.
7221 - 72nd Street,
Tilbury Industrial Park,
Delta, B.C., Canada V4G 1M5

Telephone: (604) 946-3811
Fax: (604) 946-3788
email: sales@pothierenterprises.com
Web: www.pothierenterprises.com

OPERATING INSTRUCTIONS, PARTS LIST & USER MANUAL

#PEO1433 14" CORE CUTTING SAW

C/W 3 H.P., 230 VOLTS, 60 HZ., 3 PHASE MOTOR

POTHIER ENTERPRISES LTD.
7221 - 72nd Street,
Tilbury Industrial Park,
Delta, B.C., Canada V4G 1M5

Telephone: (604) 946-3811
Fax: (604) 946-3788
email: sales@pothierenterprises.com
Web: www.pothierenterprises.com

CORE CUTTING PROCEDURE

(ELECTRIC MOTOR)
(#PEO1433 - 14" CORE CUTTING SAW)

A) MOUNT SAW BLADE SO IT TURNS IN DIRECTION OF ARROW.

B) LOWER BLADE SO CUTTING EDGE IS APPROXIMATELY 2 1/2" BELOW THE OPEN SLOT IN THE CORE CUTTING BRACKET AND LOCK CARRIAGE WITH HANDLE AT REAR.

C) TURN SAW SWITCH TO ON POSITION.

D) TURN WATER ON BY TURNING VALVE IF DIRECT WATER SUPPLY IS USED. IF WATER PUMP IS USED, PUMP WILL START WHEN SAW MOTOR IS TURNED ON. (IF PUMP IS PLUGGED INTO SIDE OF 60 CYCLE MOTOR).

E) PLACE CORE INTO CUTTING BRACKET AND PUSH CART THROUGH THE BLADE UNTIL CORE IS CUT COMPLETELY IN HALF.

F) **CAUTION**: DO NOT ATTEMPT TO OVERFEED THE CORE THROUGH THE SAW BLADE, ESPECIALLY WHEN CUTTING HARD CORE. IF OVERFEEDING OCCURS, MOTOR WILL OVERHEAT AND POWER DOWN, AND MAY CAUSE THE WINDINGS TO BURN OUT.

G) AT END OF DAY, CLEAN ALL CUTTINGS FROM SAW, PUMP AND HOSE.

H) **WARNING**:ALWAYS MAKE SURE SAW IS CONNECTED TO A PROPERLY GROUNDED ELECTRICAL OUTLET. FAILURE TO COMPLY WITH THIS WARNING COULD RESULT IN SERIOUS BODILY INJURY.

I) **CAUTION**: GOOD MOTOR PERFORMANCE IS DEPENDENT ON PROPER VOLTAGE. EXTENSION CORDS THAT ARE TOO LONG AND/OR SMALL REDUCE AVAILABLE VOLTAGE TO MOTOR UNDER LOAD. VOLTAGE AND AMPERAGE SHOULD BE TESTED AT THE MOTOR. USE EXTENSION CORDS NO SMALLER THAN INDICATED BELOW:

MOTOR HP	**15' CORD 230V**	**25' CORD 230V**	**50' CORD 230V**
3 HP	**#14/3**	**#12/3**	**#10/3**

J) A 30 OR 40 AMP CIRCUIT SHOULD BE DESIGNATED SOLELY FOR THE SAW. THE 3 H.P. MOTOR, WHEN ON 230 VOLTS, DRAWS ALMOST **15 AMPS** WHEN RUNNING, BUT REQUIRES **DOUBLE** THE AMPS FOR STARTING.

IF THE MOTOR DOES NOT GET ENOUGH AMPS, IT WILL EVENTUALLY BURN UP THE START WINDINGS AND FAIL.

POTHIER ENTERPRISES LTD.
7221 - 72nd Street,
Tilbury Industrial Park,
Delta, B.C., Canada V4G 1M5

Telephone: (604) 946-3811
Fax: (604) 946-3788
email: sales@pothierenterprises.com
Web: www.pothierenterprises.com

APPLICATION CHART FOR CORE CUTTING BLADES

MODEL VHC24 SEGMENTED

USED FOR CUTTING VERY HARD CORE, SUCH AS CHERT, JASTERITE, QUARTZITE, HARD GRANITES, ETC. IF YOU USE THIS BLADE FOR CUTTING SOFTER CORE, IT MAY WEAR OUT PREMATURELY.

MODEL HC44 SEGMENTED, CCRB14P CONTINUOUS RIM

USED FOR CUTTING HARD CORE, SUCH AS RHYOLITE, GRANITE, SILICIFIED VOLCANICS, ETC. IF YOU USE THIS BLADE FOR CUTTING SOFTER / ABRASIVE CORE, IT MAY WEAR OUT PREMATURELY.

MODEL CC34 SEGMENTED (SCQ14), CCRB14 CONTINUOUS RIM

USED FOR CUTTING REGULAR CORE SUCH AS BASALT, DIORITE, DIABASE, GABRO, DOLOMITE, WEATHERED GRANITE, SERPENTINE, AND PERIDOTITE. IF YOU USE THIS BLADE FOR CUTTING SOFTER/ABRASIVE CORE, IT MAY WEAR OUT PREMATURELY. IF YOU USE THIS BLADE FOR HARDER CORE, IT MAY GO DULL AND NOT WANT TO CUT.

MODEL SC54 SEGMENTED

USED FOR CUTTING SOFT/ABRASIVE CORE SUCH AS CONGLOMERATES, SHALES, LIMESTONE, SILICA AND SULPHIDES. IF YOU USE THIS BLADE FOR CUTTING HARDER CORE, IT MAY GO DULL AND NOT WANT TO CUT.

NOTE :

ENSURE BLADES ARE MOUNTED ON SAW SO THEY TURN IN THE CORRECT DIRECTION.

CAUTION :

WHEN SAWING, EASE CORE INTO BLADE, AFTER CONTACT HAS BEEN MADE, THEN APPLY PRESSURE.

ENSURE THAT CORE IS SECURED SO AS NOT TO MOVE WHILE BEING CUT. IF CORE MOVES AND BLADE IS BENT SIDEWAYS, LOSS OF SEGMENTS COULD OCCUR.

Head Assembly

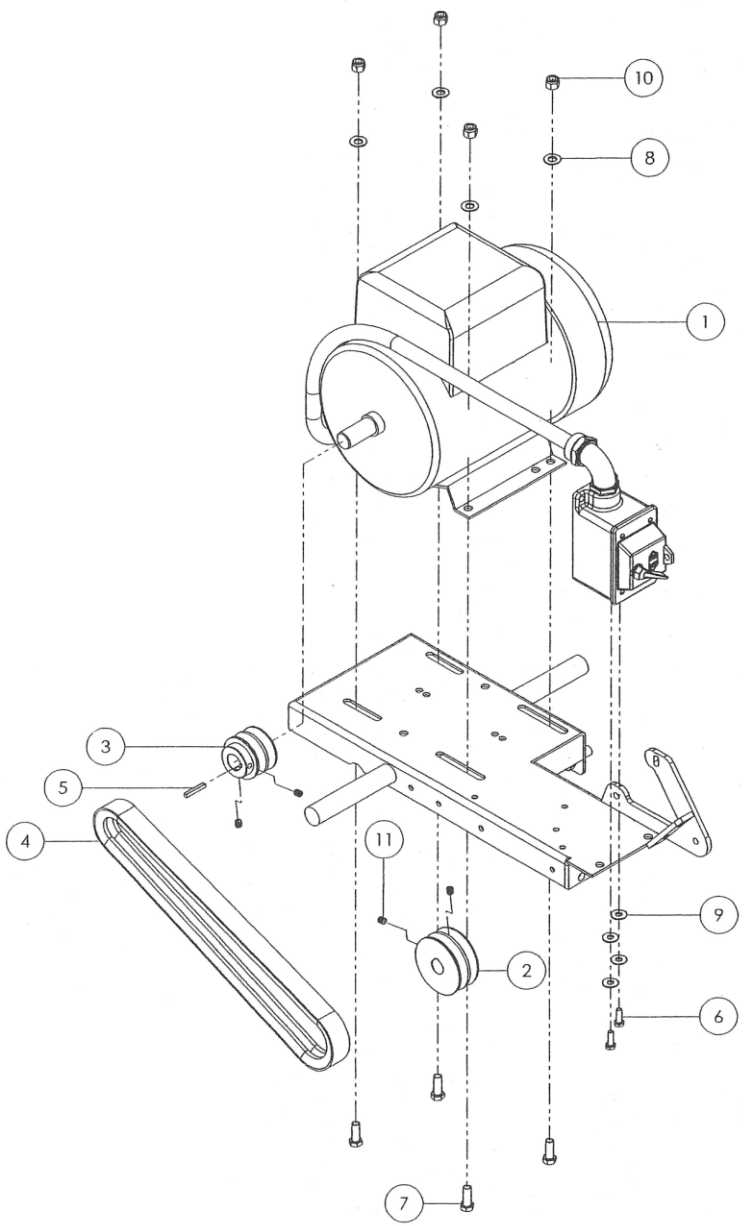

ITEM	QTY	PART NO	DESCRIPTION
1	1	542169656	MOTOR: 3HP 3450 208-230/60/1
		542000806	MOTOR: 3HP 3450 208-230/460/60/3
		542000816	MOTOR: 2HP 3450 115/208-230/60/1
2	1	060496	PULLEY, 2GA 3.00 - .751 BORE
3	1	060505	PULLEY, 2GA 2.25 - .875 BORE
4	1	449171	V-BELT: AX35, SET OF 2
5	2	020062	KEY, .1875 SQ x 1.25
6	2	539990580	HHCS .250-20 UNC, STL, GR 5, .75 LG
7	4	539990563	HHCS .375-16 UNC, STL, GR 5, 1.00 LG
8	4	539990122	WASHER, FLAT, .375, NARROW, PLATED (SAE)
9	4	541205764	WASHER, FLAT, .250 STANDARD, PLATED
10	4	539976979	.375-16UNC HEX LOCK NUT
11	4	020550	SHSS, .3125-18 X .375

Upper Platform

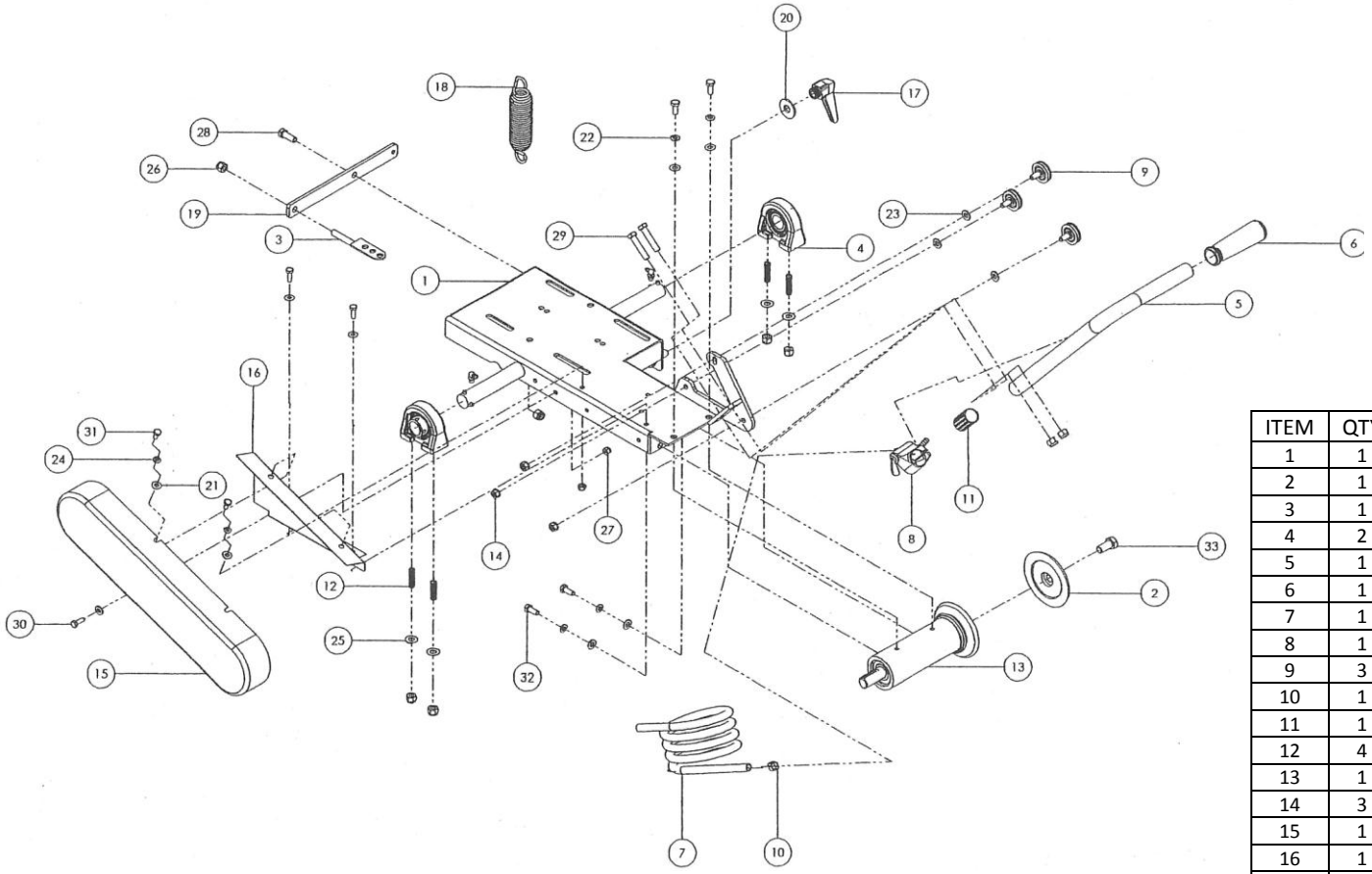

ITEM	QTY	PART NO	DESCRIPTION
1	1	510137105	WELDMENT, PLATFORM
2	1	030951	FLANGE, OUTER
3	1	177696	DRAW BOLT, .375-16UNC
4	2	045241	BEARING, PILLOW BLOCK, 1"
5	1	510260301	HANDLE
6	1	542139568	HANDLE GRIP
7	1	523120304	VINYL TUBING, 3/8" I.D. X 40"
8	1	506386012A	VALVE ASSY
9	3	030822	CART WHEEL
10	1	541200467	CLAMP, POINTER ROPE
11	1	537204201	CONDUIT, GRAY PVC
12	4	91375A628	SHSS, 3/8”-16UNC X 1 1/2" LG
13	1	195035	BLADE SHAFT ASSY, ELEC
14	3	032366	NUT, KEPS, .3125-18UNC
15	1	031026	BELT GUARD
16	1	177427	BRACKET, BELT GUARD, 2HP
	1	177426	BRACKET, BELT GUARD, 3HP
17	1	174679	LEVER, ADJUSTABLE
18	1	177905	SPRING, EXTENSION
19	1	510140104	BRACKET, SPRING ANCHOR
20	1	020745	WASHER, FLAT, .50 STD, PLATED
21	5	539990055	WASHER, FLAT, .25, NARROW, PLTD
22	4	539990187	WASHER, LOCK, .312 REG, STL, PLTD
23	7	539990188	WASHER, FLAT, .313, NARROW, PLTD
24	2	539990052	WASHER, LOCK, .25 REG, STL, PLTD
25	4	539990122	WASHER, FLAT, .375, NARROW, PLTD
26	8	5399976979	.375-16UNC HEX LOCK NUT
27	3	539976978	.250-20UNC HEX LOCK NUT
28	1	539990563	HHCS .375-16UNC, STL, GR 5, 1.00 LG
29	2	539990730	HHCS .375-16UNC, STL, GR 5, 1.75 LG
30	3	539990580	HHCS .250-20UNC, STL, GR 5, .75 LG
31	2	539990071	HHCS .250-20UNC, STL, GR 5, .50 LG
32	4	020314	HHCS .3125-24UNC, STL, GR 5, .75 LG
33	1	020378	HHCS .500-20UNC, STL, GR 5, 1.00 LG

Lower Platform

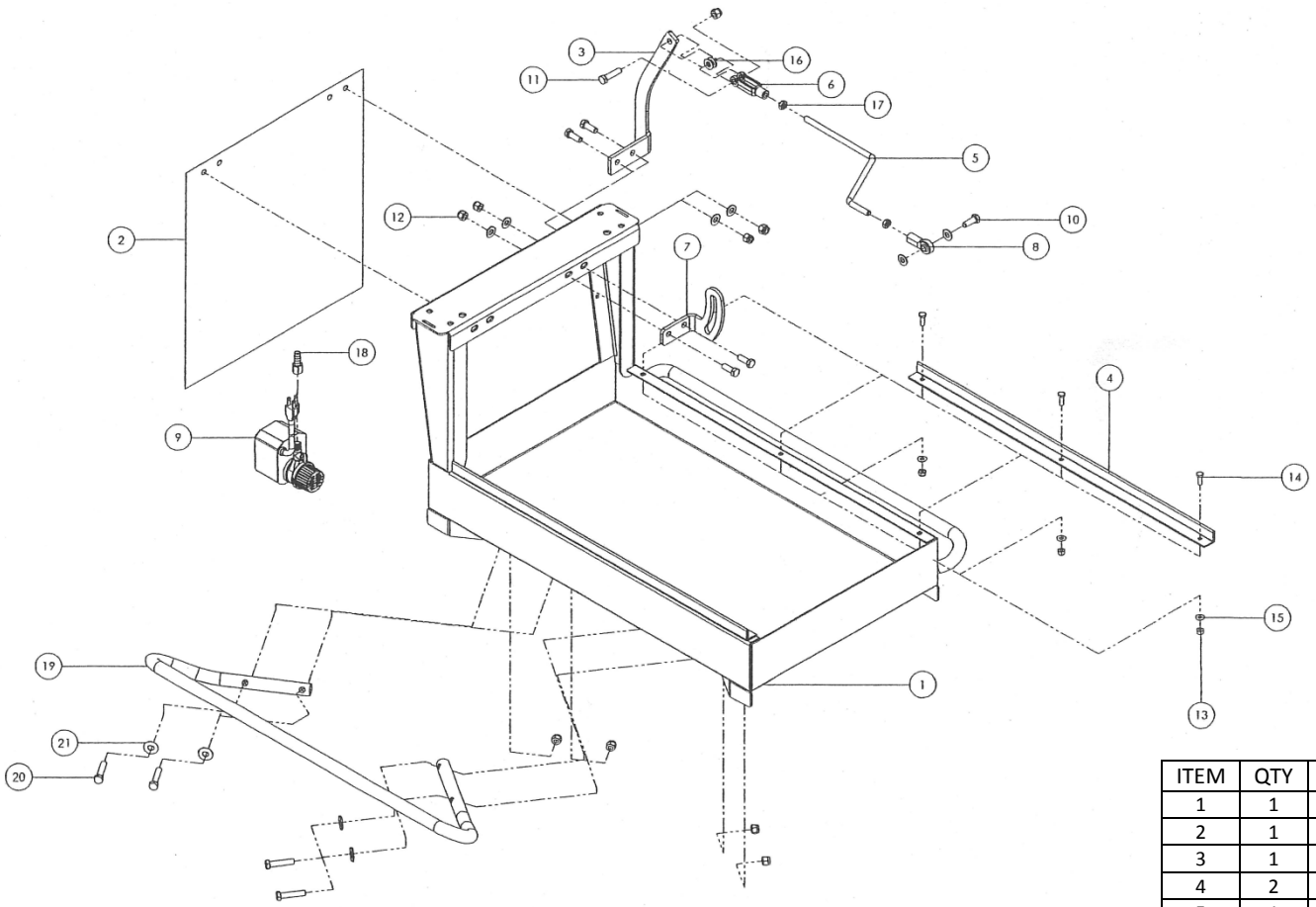

ITEM	QTY	PART NO	DESCRIPTION
1	1	510136204	WELDMENT, WATER PAN
2	1	950901	SPLASH CURTAIN
3	1	510140403	BRACKET, STAY LEVEL ANCHOR
4	2	510140801	CART RAIL
5	1	510154401	LINK ROD
6	1	060460	YOKE, EBERHARD 4A .375 TAP X.375
7	1	510140105	BRACKET, PIVOT
8	1	510179301	ROD END, R.H.
9	1	502621301	WATER PUMP, SUBMERSIBLE
10	5	539990563	HHCS .375-16UNC, STL, GR 5, 1.00 LG
11	1	539990655	HHCS .375-16UNC, STL, GR 5, 1.50 LG
12	13	539976979	.375-16UNC HEX LOCK NUT
13	6	539976978	.250-20UNC HEX LOCK NUT
14	6	539990580	HHCS .250-20UNC, STL, GR 5, .75 LG
15	6	539990055	WASHER, FLAT, .25, NARROW, PLTD
16	8	539990122	WASHER, FLAT, .375, NARROW, PLTD
17	2	020171	JAM NUT, HEX, THIN .375-24 Z/P
18	1	030654	INSERT, HOSE BARB
19	2	542205340	HANDLE, LIFTING
20	8	539990730	HHCS .375-16UNC, STL, GR 5, 1.75 LG
21	8	020743	WASHER, FLAT, .375, STD, PLATED

Conveyor Cart Assembly (Part Number 437325) & Accessories

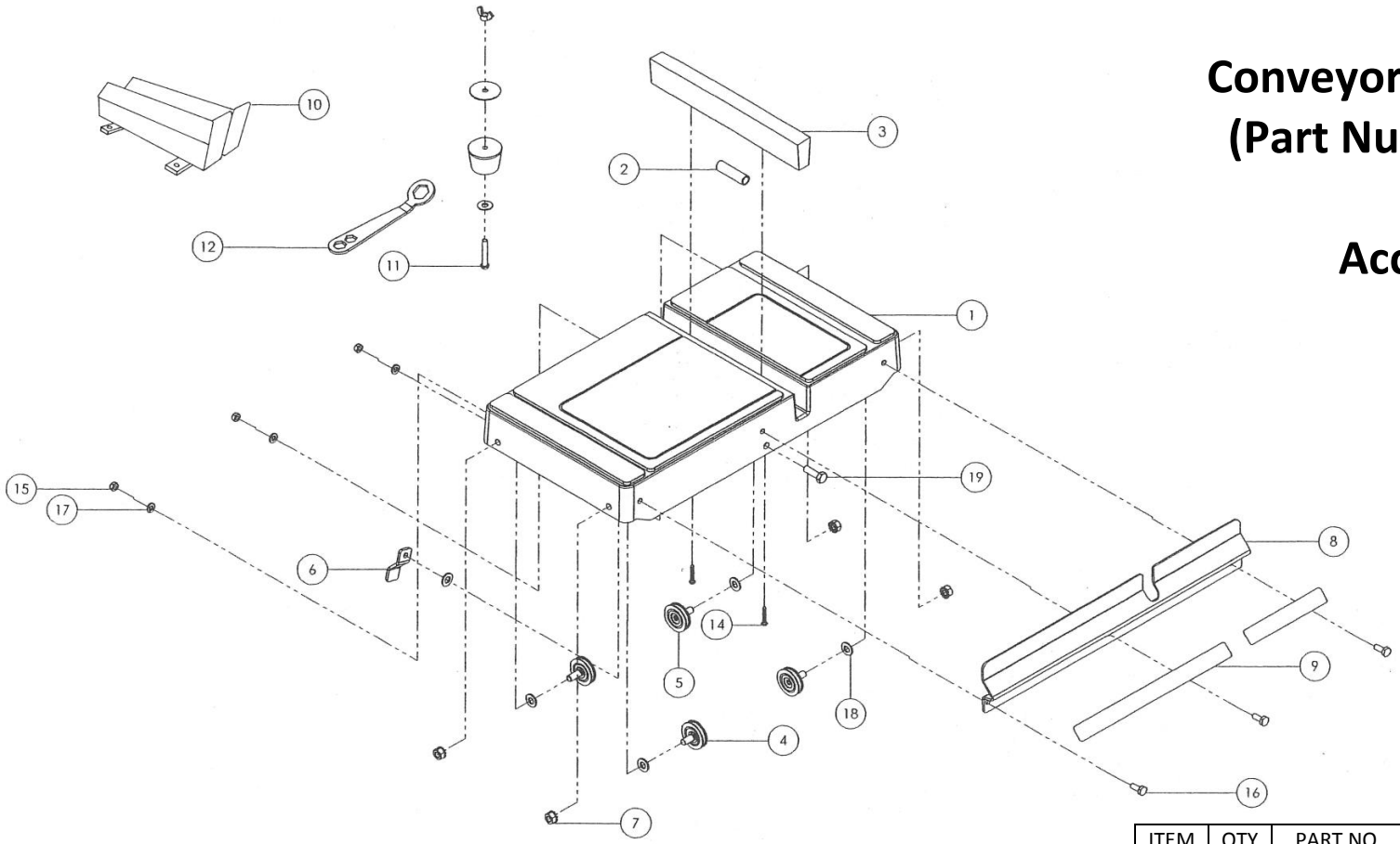

ITEM	QTY	PART NO	DESCRIPTION
		437325	CART, CONVEYOR, COMPLETE
1	1	177666	CART, CONVEYOR W/ MOLDED TOP
2	1	170038	VINYL TUBING, 3/8” I.D.
3	1	542030362	INSERT, WOOD, 10” LG
4	1	542203119	CART WHEEL, ECCENTRIC
5	3	030822	CART WHEEL
6	1	542193951	CART STOP
7	4	032366	NUT, KEPS, .3125-18UNC
8	1	510417501	BACK STOP
9	1	177977	DECAL, RULER, ELECTRIC
10	1	073106	CRADLE, CORE CUTTING
11	1	030386	DRAIN PLUG ASSY
12	1	177383	WRENCH, 3/4”, 9/16” & 1/2” BOX END
14	2	020699	RHMS, #8 X 1.25” LG, SLTD
15	3	541204836	.250-20UNC HEX NUT
16	3	020301	HHCS .250-20UNC, STL, GR 5, .63 LG
17	3	539990052	WASHER, LOCK, .25 REG, STL, PLTD
18	5	539990188	WASHER, FLAT, .313, NARROW, PLTD
19	1	539990209	HHCS .3125-18UNC, STL, GR 5, 1.00 LG

Blade Guard Assembly

(Part Number 437303)

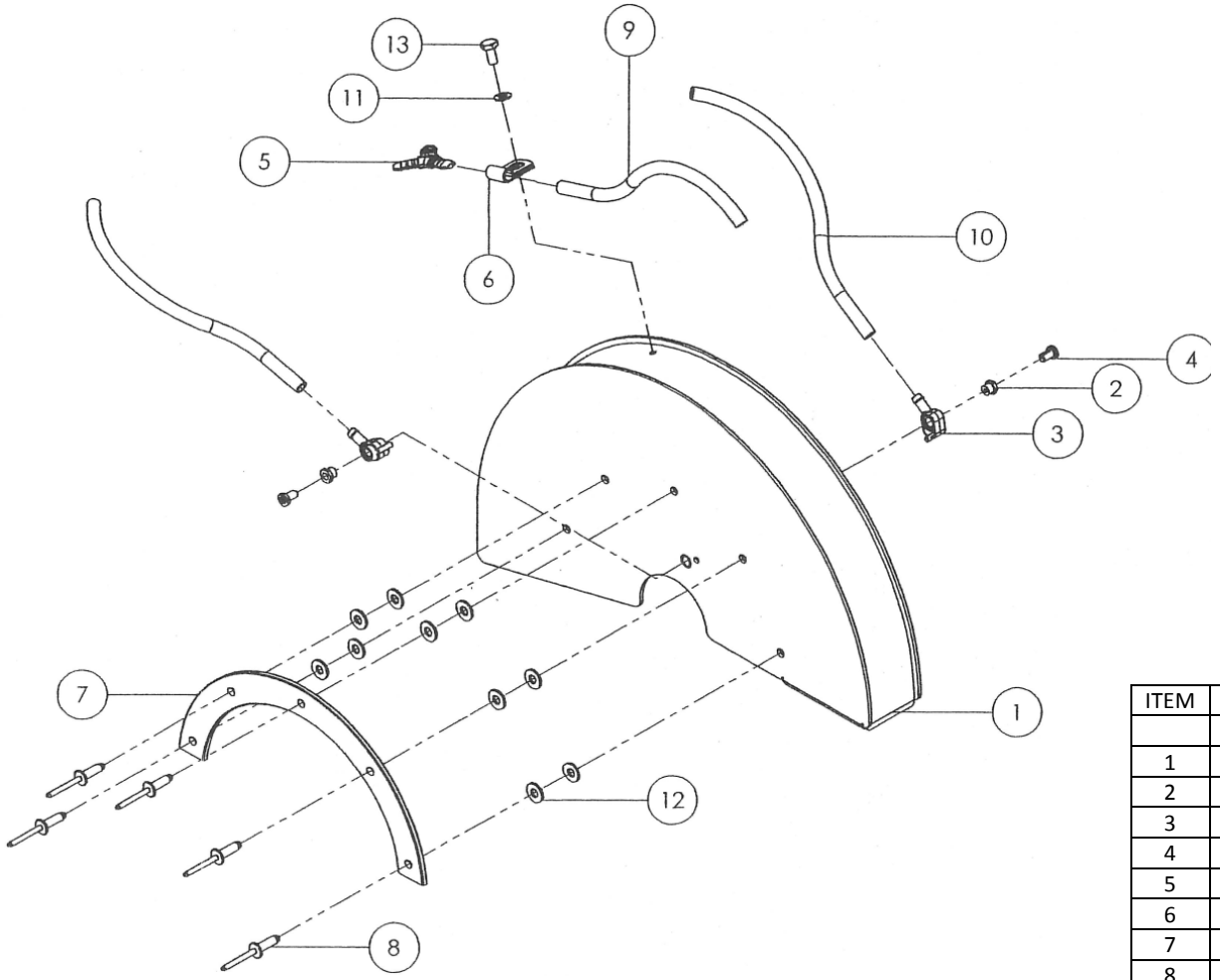

ITEM	QTY	PART NO	DESCRIPTION
		437303	BLADE GUARD, COMPLETE
1	1	510259320	BLADE GUARD ONLY, ELECTRIC
2	2	510190701	NIPPLE – MODIFIED
3	2	504634501	HOUSING
4	2	504634601	SCREW
5	1	506328701	HOSE FITTING, Y-TUBE
6	1	166672	CLAMP, VINYL COATED, 1/4 X 5/16
7	1	060435	TRACK, BLADE GUARD
8	5	020701	POP RIVET, USM #SD88BS
9	1	522981803	TUBING, 6MM I.D. X 229MM
10	2	522981802	TUBING, 6MM I.D. X 229MM
11	1	539990052	WASHER, LOCK, .25 REG, STL, PLTD
12	10	539990055	WASHER, FLAT, .25 NARROW, PLTD
13	1	539990071	HHCS .250-20UNC, STL, GR 5, .50 LG

Blade Shaft Assembly

(Part Number 195035 for Electric Models)
(Part Number 195037 for 4.8HP Honda Models)

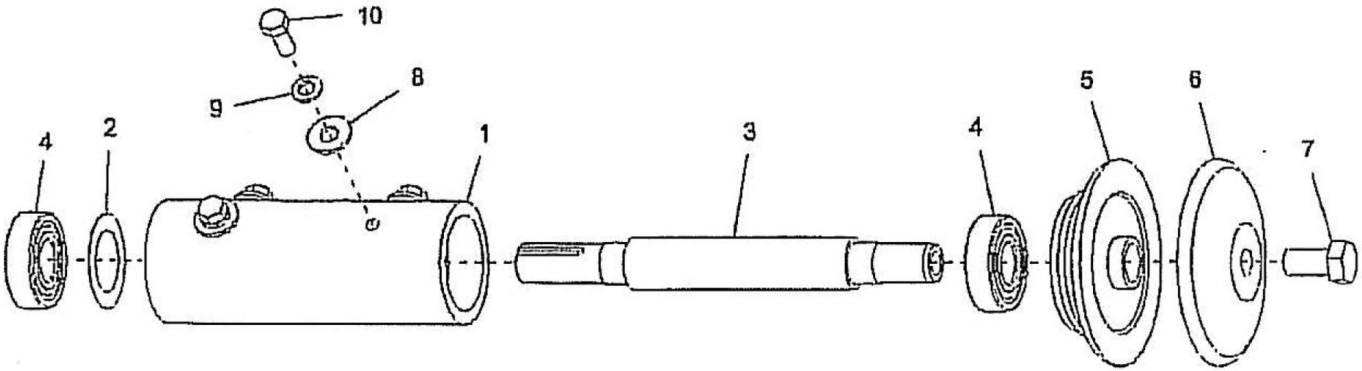

ITEM	QTY	PART NO	DESCRIPTION
1	1	195011	HOUSING, BLADE SHAFT
2	1	030004	WASHER, SPRING, FINGER LOAD
3	1	195015	BLADE SHAFT (ELECTRIC)
	1	195012	BLADE SHAFT (4.8HP HONDA GAS)
4	2	139273	BEARING W/ SEAL
5	1	177973	COLLAR, INNER
6	1	030951	COLLAR, OUTER
7	1	020378	CAPSCREW, HEX HD .500-20UNF X 1.00 (ELECTRIC)
	1	177290	CAPSCREW, HEX HD .500-20UNF X 1.00 LH (4.8HP HONDA GAS)
8	4	020742	WASHER, FLAT, .313 DIA
9	4	020785	WASHER, LOCK, SPLIT, .313 DIA
10	4	020314	CAPSCREW, HEX HD .312-24UNF X .75

POTHIER ENTERPRISES LTD.
7221 - 72nd Street,
Tilbury Ind. Park,
Delta, B.C. Canada V4G 1M5

Telephone: (604) 946-3811
Fax: (604) 946-3788
email: sales@pothierenterprises.com
Web Page: www.pothierenterprises.com

Wiring Diagram: 3 HP Electric Motor

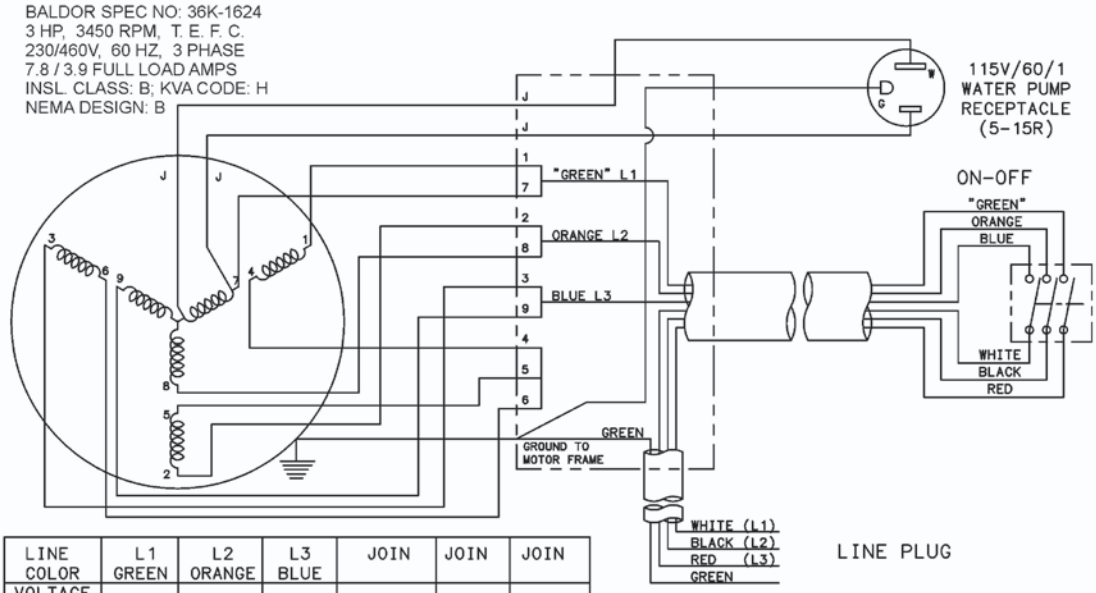

LINE COLOR	L1 GREEN	L2 ORANGE	L3 BLUE	JOIN	JOIN	JOIN	
VOLTAGE							
230V	1, 7	2, 8	3, 9	4,5,6	---	---	SHOWN
460V	1	2	3	4,7	5,8	6,9	

NOTE:
1. TO CHANGE ROTATION: REVERSE 2 LINE LEADS ON LINE PLUG.

PART NO.	SPEC.NO.	HP	RPM	VOLT	HZ	PH	F.L.AMPS
542000806	36K16-1624	3	3450	230/460	60	3	7.8 / 3.9

PRACTICE SAFE MAINTENANCE

- Understand service procedure before doing work. Keep area clean and dry.
- Never lubricate, service or adjust machine while it is moving. Keep hands, feet, and clothing from power-driven parts. Disengage all power and operate controls to relieve pressure. Lower equipment to the ground. Stop the engine. Remove the key. Allow machine to cool.
- Securely support any machine elements that must be raised for service work.
- Keep all parts in good condition and properly installed. Repair damage immediately. Replace worn or broken parts. Remove any buildup of grease, oil, or debris.
- Disconnect battery ground cable (-) before making adjustments on electrical systems or welding on machine.

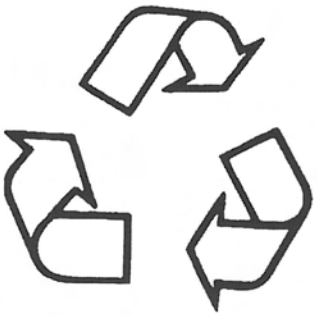

DISPOSE OF WASTE PROPERLY

- Improperly disposing of waste can threaten the environment and ecology. Potentially harmful waste used with equipment includes items such as oil, fuel, coolant, brake fluid, filters, and batteries.
- Use leakproof containers when draining fluids. Do not use food or beverage containers that may mislead someone into drinking from them.
- Do not pour waste onto the ground, down a drain, or into any water source.
- Air conditioning refrigerants escaping into the air can damage the Earth's atmosphere. Government regulations may require a certified air conditioning service center to recover and recycle used air conditioning refrigerants.
- Inquire on the proper way to recycle or dispose of waste from your local environmental or recycling center.

SAFETY DECALS - FOR THE SAFETY OF YOURSELF AND OTHERS REPLACE ANY DAMAGED OR MISSING SAFETY DECALS.

Health & Safety

Safety Precautions

Before using this equipment, study this entire manual to become familiar with its operation. Do not allow untrained or unauthorized personnel, especially children, to operate this equipment. Use only factory authorized parts for service.

When warning decals are destroyed or missing, contact us immediately at **(604) 946-3811** for replacement. For the safety of yourself and others, it is imperative that the following rules are observed. Failure to do so may result in serious injury or death.

This notation appears before warnings in the text. It means that the step which follows must be carried out to avoid the possibility of personal injury or death. These warnings are intended to help the technician avoid any potential hazards encountered in the normal service procedures. We strongly recommend that the reader takes advantage of the information provided to prevent personal injury or injury to others.

USE COMMON SENSE WHEN HANDLING FUELS

Transport and handle fuel only when contained in approved safety container.

Do not smoke when refueling or during any other fuel handling operation.

Do not refuel while the engine is running or while it is still hot.

If fuel is spilled during refueling, wipe it off from the engine immediately and discard the rag in a safe place.

Do not operate the equipment if fuel or oil leaks exist - repair immediately.

Never operate this equipment in an explosive atmosphere.

Ear protection required when operating this equipment.

Health & Safety

Safety Precautions

Avoid contact with hot exhaust systems and engines.

Allow engine to cool before performing any repairs.

Never operate unit in a poorly ventilated or enclosed area.

Avoid prolonged breathing of exhaust gases.

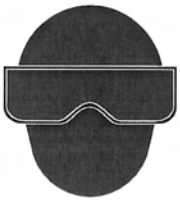

Eye protection required when operating this equipment.

Head protection required when operating this equipment.

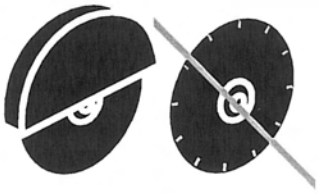

Never operate this equipment without all guards in place.

POTHIER ENTERPRISES LTD.
7221 - 72nd Street,
Tilbury Ind. Park,
Delta, B.C. Canada V4G 1M5

Telephone: (604) 946-3811
Fax: (604) 946-3788
email: sales@pothierenterprises.com
Web Page: www.pothierenterprises.com

BALDOR®
MOTORS • DRIVES • GENERATORS

For Warranty Information on your Baldor motor or for the nearest repair service center please go to

www.baldor.com/support

©Baldor Electric Company
505CARD

Printed in U.S.A.
5/05 FARR 10,000

POTHIER ENTERPRISES LTD.

7221 - 72nd Street,
Tilbury Ind. Park,
Delta, B.C. Canada V4G 1M5

Telephone: (604) 946-3811
Fax: (604) 946-3788
email: sales@pothierenterprises.com
Web Page: www.pothierenterprises.com

Pothier Enterprises' New Equipment Warranty

Except as noted below, Pothier Enterprises warrants that its new equipment will be free from manufacturing defects for a period of one (1) year from date of purchase by the original consumer purchaser.

The above warranty is subject to the following exceptions:

1. To the extent the following components are part of any of the new equipment, Pothier Enterprises' warranty on the component parts is limited to the manufacturer's warranty period set out below:

Manufacturer...Warranty Period	Manufacturer...Warranty Period	Manufacturer...Warranty Period
GAS ENGINES	ELECTRIC MOTORS	WATER PUMPS
Briggs & Stratton .....2 years	Baldor.....1 year	Beckett.....1 year
Kohler Gas.....2 years	Leeson.....1 year	
Robin Gas.....2 yrs./2,000 hrs.		
Honda Gas.....2 years		
Wisconsin Gas....1 yr/2,000 hrs.		

2. Pothier Enterprises obligation under this warranty is expressly limited to the replacement or repair at Pothier Enterprises, Delta, B.C., or at a service facility designated by Pothier Enterprises, of such part or parts as inspection shall disclose to have been defective. This warranty does not cover labour and does not cover maintenance items such as belts, air filters, bearings, and wheels. Purchaser will be responsible for paying shipping costs to and from the location where the equipment is to be repaired or replaced. Motors and engines are to be serviced by the nearest authorized service center. These service centers are designated by the manufacturer of the engine/motor. **Under no circumstances will Pothier Enterprises be responsible for incidental or consequential damages.**

3. Pothier Enterprises' warranty does not apply to defects caused by damage, abuse, modifications, low voltage, acts of God, unreasonable use, faulty repairs made by others or defects caused by failure to provide reasonable maintenance. All warranties are void if the equipment or any of its components are altered or modified by the purchaser, or if the product is used in a manner or with a blade not recommended by the manufacturer.

4. The foregoing express warranties are in lieu of all other warranties. POTHIER ENTERPRISES EXPRESSLY DISCLAIMS ALL OTHER WARRANTIES, INCLUDING, WITHOUT LIMITATION, THE IMPLIED WARRANTIES OF MERCHANTABILITY AND FITNESS FOR A PARTICULAR PURPOSE.

FILL OUT CARD BELOW, CUT ON DOTTED LINE, AND MAIL

Warranty - Registration Card

Description_____

Model No._____ Serial #_____

Brand of Motor_____ Horsepower_____

Motor Model No._____ Motor Serial No._____

Purchased From (company)_____

City_____ Prov/State_____

Purchasing Co._____ Date Purchased_____

Street_____

City_____ Prov/State_____ Postal Code_____ Country_____

Your Name_____ Title_____

Type of Business_____